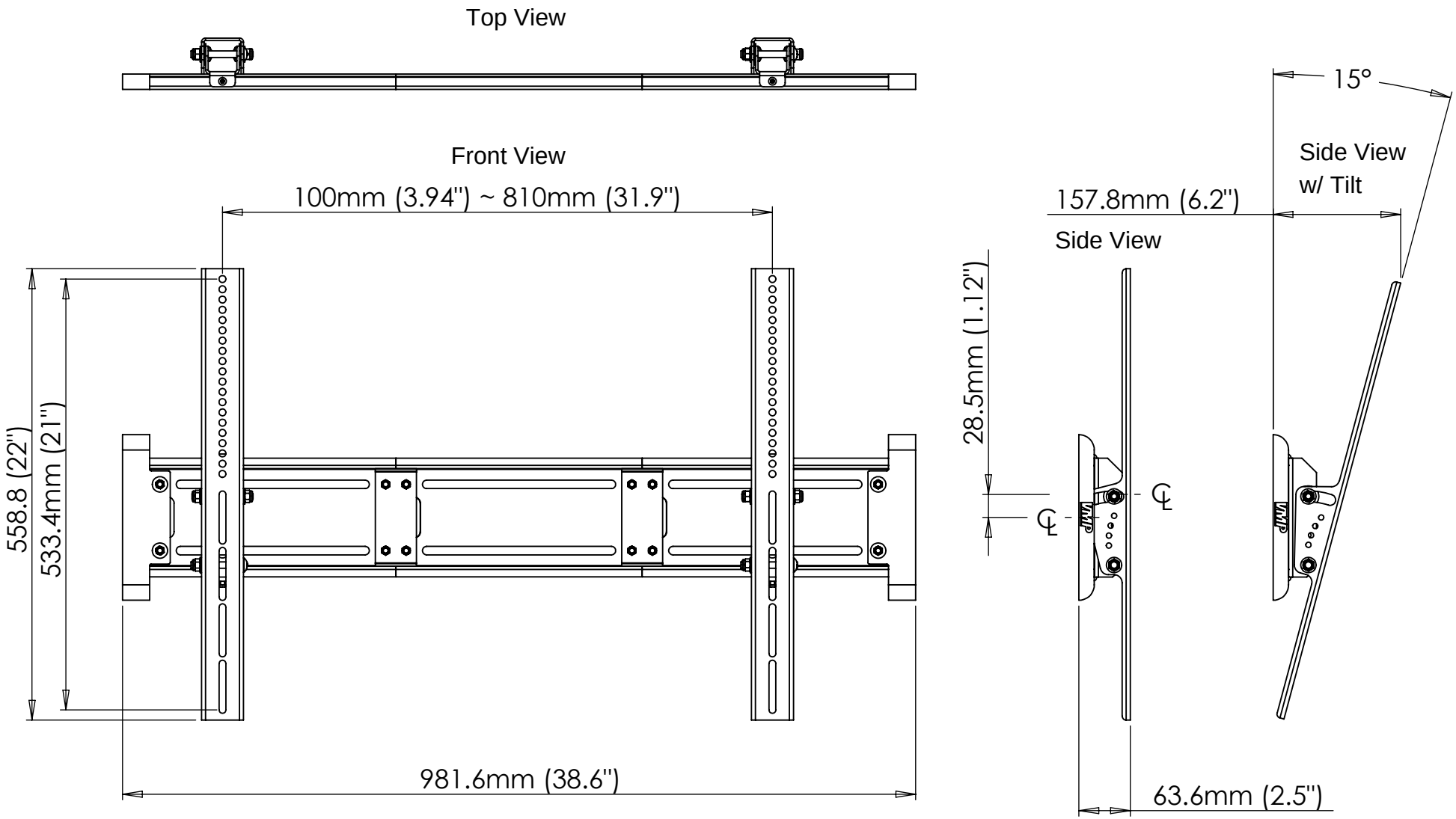

VIDEO MOUNT PRODUCTS

Title:
FP-LDSB w/ out extensions

SIZE	DWG. NO.	REV
A		

SCALE: 1:7	Unit: mm	SHEET 1 OF 3

5 4 3 2 1

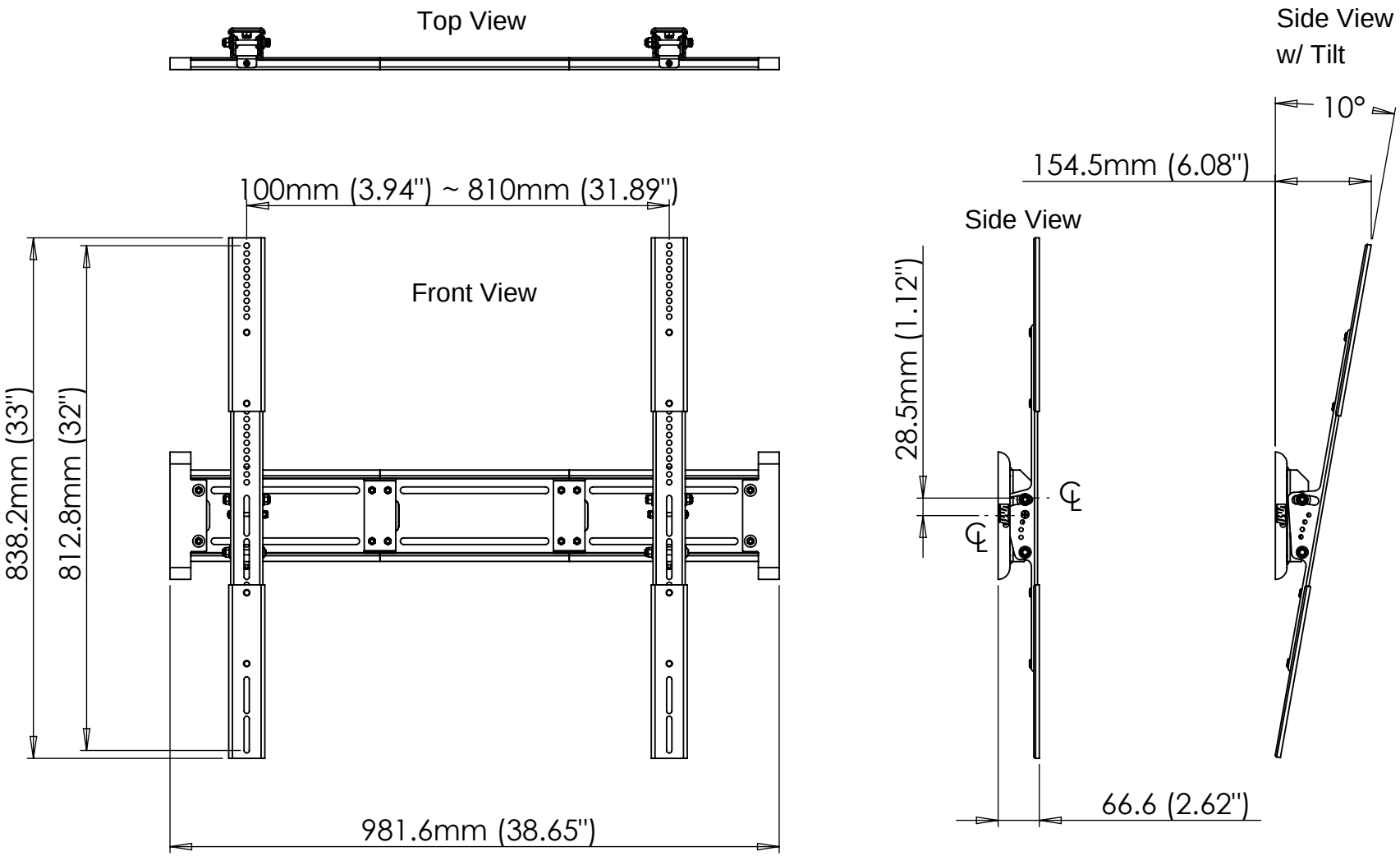

VIDEO MOUNT PRODUCTS

Title:
FP-LDSB w/ extensions

SIZE	DWG. NO.	REV
A		

SCALE: 1:10 | Unit: mm | SHEET 2 OF 3

5 4 3 2 1

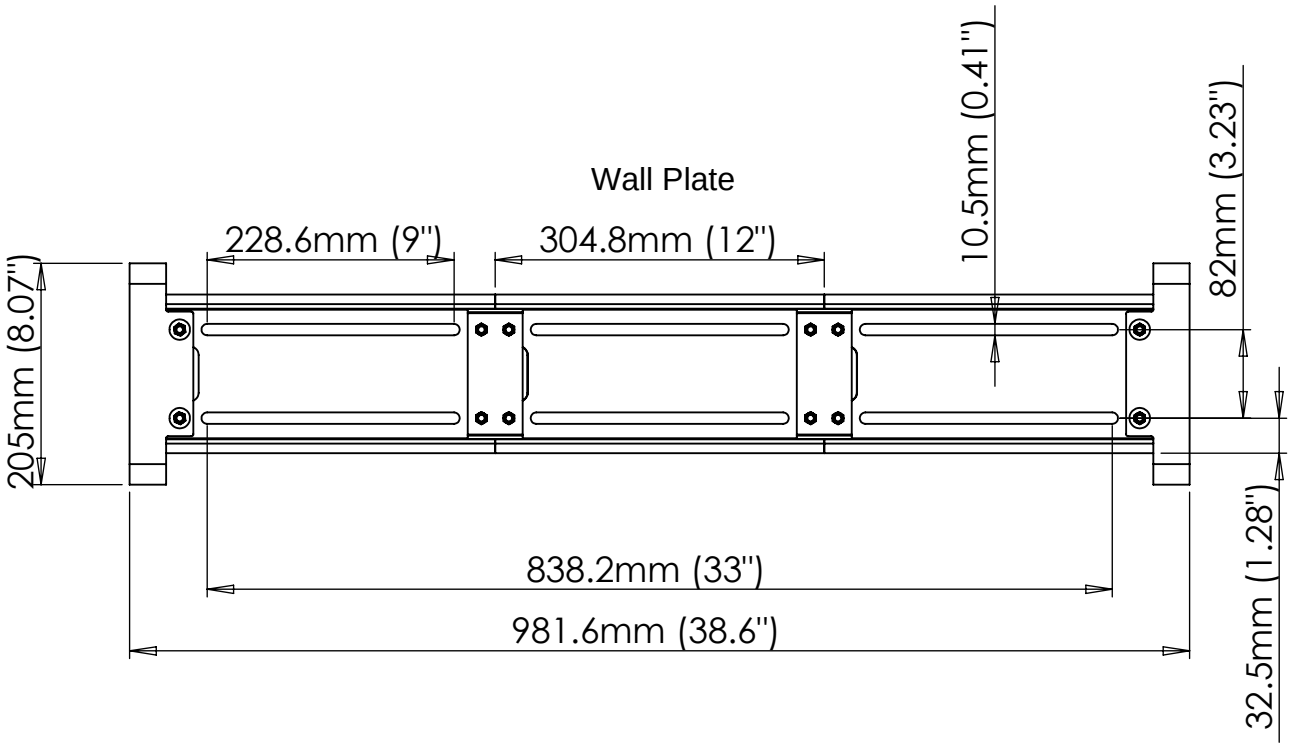

VIDEO MOUNT PRODUCTS

Title:

FP-LDSB Wall Plate

SIZE	DWG. NO.	REV
A		

SCALE: 1:7	Unit: mm	SHEET 3 OF 3

5 4 3 2 1